The peak current of the motor is 9.5A and the peak phase current of the driver is 8A.
The motor have 3 phases and at least two of them active at once. This means that the approximate minimum peak phase current needed for efficient control is:

Ioutx = 9.5A / sqrt(3) ~ 5.48A.

Therefore if cycle-by-cycle threshold is set to 5.48A*0.9 > Ilim it will be sufficient for the driver to handle the motor load.

Ilim = 5.48 * 0.9 ~ 4.94A
=> Vlim = AVDD/2 - 0.4*Ilim/8 ~ 1.40V (Calc. according datasheet)

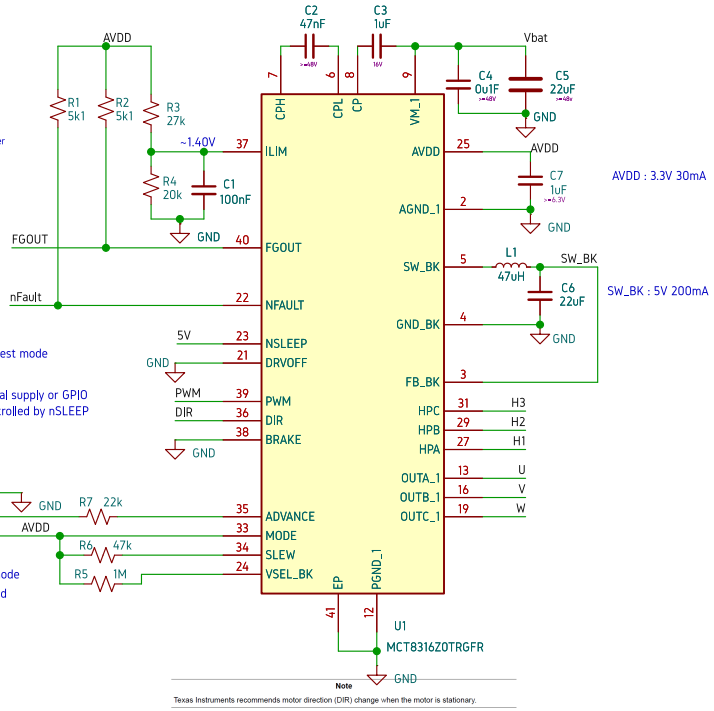

Good to have nFAULT connected to a pull-up, if not chip might enter test mode

nSLEEP makes device enter sleepmode when LOW. Connect to external supply or GPIO
Suggested not to connect to AVDD as LDO and buck convertor is controlled by nSLEEP

DRVOFF turns off motors when HIGH

ADVANCE with 22k res to AVDD sets 25deg mode, AGND sets 4 deg mode
MODE to AVDD sets Mode7 - sync digital HAL input + ASR AAR enabled
SLEW to AVDD thru 47k - 125V/us mode
Vsel_BK thru 1M (hi-Z) to AVDD - 5V mode

Note

Texas Instruments recommends motor direction (DIR) change when the motor is stationary.

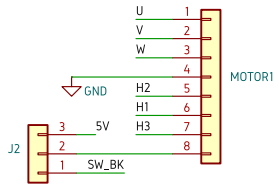

Motor used: NanoTech DF45L024082-A2
24V 4840RPM

Cable UL1430 AWG24
Connectors: WR-WTB 2.54 mm Male Locking Header on this PCB.
WR-WTB 2.54 mm Female Locking Header on the motor cable

Motor hall sensor takes 3.3.. 18V input.

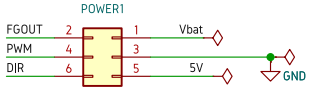

Connects to the pwr board

Motor driver evaluation board - interface between pwr_v2 and motor.
Major change:
TI IC sometimes gives 5.7V as default output - connect motor 5V to 5V from pwr board
ADV needs to be evaluated

Title: Motor driver evaluation board for pwr_v2	Sheet: / File: md_eval_v2.kicad_sch Id: 1/1
SeeGoals, FIA Robotics	Rev: V2
Designed by: Aditya Dharamshi	Date: 2025-09-01
	KiCad E.D.A. 9.0.7